User's Installation Guide

Explorer® 4200 Home Gateway

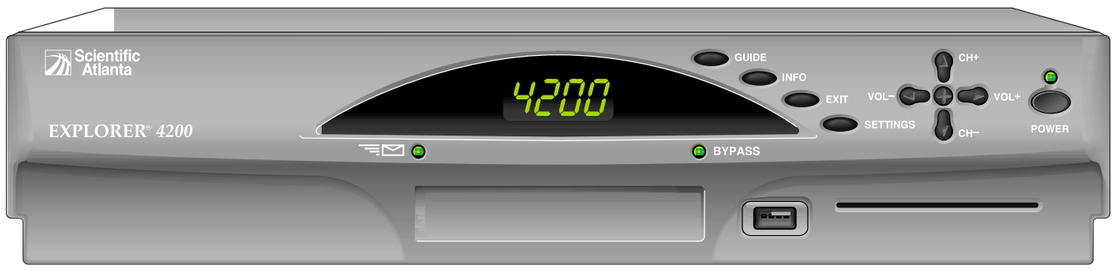

Bringing the Interactive Experience Home™

United States FCC Compliance

This equipment has been tested and found to comply with the applicable limits of Part 15 of FCC Rules. These limits are designed to provide reasonable protection against harmful interference in a residential installation. This equipment generates, uses, and can radiate radio frequency energy and, if not installed and used in accordance with the instructions, may cause harmful interference to radio or TV reception, which can be determined by turning the equipment off and on. The user is encouraged to try to correct the interference by one or more of the following measures:

- Increase the separation between the equipment and receiver
- Connect the equipment into an outlet on a circuit different from that to which the receiver is connected
- Consult your cable company or an experienced radio/TV technician for help

Any changes or modifications not expressly approved by Scientific-Atlanta could void the user's authority to operate the equipment.

Important: The information shown in the FCC Declaration of Conformity paragraph below is a requirement of the FCC and is intended to supply you with information regarding the FCC approval of this device. *The phone numbers listed are for FCC-related questions only and not intended for questions regarding the connection or operation for this device. Please contact your cable service provider for any questions you may have regarding the operation or installation of this device.*

FCC Declaration of Conformity

This device complies with *Part 15 of FCC Rules*. Operation is subject to the following two conditions: 1) the device may not cause harmful interference, and 2) the device must accept any interference received, including interference that may cause undesired operation.

EXPLORER® Home Gateway models:
Models E4200
Manufactured by: Scientific-Atlanta, Inc.;
4261 Communications Drive;
Atlanta, Georgia 30093-2860; USA
Telephone **770-236-1077**

Software and Firmware Use

Scientific-Atlanta, Inc. owns copyrights to the software described in this document and furnishes the software to you under a license agreement. You may only use or copy this software in accordance with the terms of your license agreement.

Scientific-Atlanta, Inc. owns copyrights to the firmware in this equipment. You may only use the firmware in the equipment in which it is provided. Any reproduction or distribution of this firmware, or any portion of it, without the express written consent of Scientific-Atlanta, Inc. is prohibited.

Canada EMI Regulation

This Class B digital apparatus meets all requirements of the Canadian Interference Causing Equipment Regulations.

Cet appareil numérique de la classe B respecte toutes les exigences du Réglement sur le matériel brouilleur du Canada.

Trademarks

Explorer, Scientific-Atlanta, and the Scientific-Atlanta logo are registered trademarks of Scientific-Atlanta, Inc. VCR Commander and "Bringing the Interactive Experience Home" are trademarks of Scientific-Atlanta, Inc.

Disclaimer

Scientific-Atlanta, Inc. assumes no responsibility for errors or omissions that may appear in this guide. Scientific-Atlanta reserves the right to change this guide at any time without notice.

United States: Scientific-Atlanta, Inc., 5030 Sugarloaf Parkway, Box 465447, Lawrenceville, GA 30042
Europe: Scientific-Atlanta Europe GmbH, Westerbachstrasse 28-32, 61476 Kronberg, Germany
Asia-Pacific: Scientific-Atlanta (Singapore) Pte. Ltd., 1 Claymore Drive, #08-11 Orchard Towers, Singapore 229594
Latin America: Scientific-Atlanta Argentina S.A., Carlos Pelligrini 1149, Piso 11º, Capital Federal 1011, Buenos Aires, Argentina

© 2002 Scientific-Atlanta, Inc. All rights reserved.
Printed in USA
Part Number 745461 Rev B
www.scientificatlanta.com
July 2002

IMPORTANT RULES FOR SAFE OPERATION

Note to the Installer

Note to CATV System Installer (USA/Canada Only)

This reminder is provided to call the CATV system installer's attention to Article 820-40 of the NEC (Section 54, Part I of the Canadian Electrical Code), that provides guidelines for proper grounding and, in particular, specifies that the CATV cable ground shall be connected to the grounding system of the building, as close to the point of cable entry as practical.

CAUTION
RISK OF ELECTRIC SHOCK DO NOT OPEN
AVIS
RISQUE DE CHOC ÉLECTRIQUE NE PAS OUVRIR

CAUTION: To reduce the risk of electric shock, do not remove cover (or back). No user-serviceable parts inside. Refer servicing to qualified service personnel.

WARNING
TO PREVENT FIRE OR ELECTRIC SHOCK, DO NOT EXPOSE THIS UNIT TO RAIN OR MOISTURE.

This symbol is intended to alert you that uninsulated voltage within this product may have sufficient magnitude to cause electric shock. Therefore, it is dangerous to make any kind of contact with any inside part of this product.

This symbol is intended to alert you of the presence of important operating and maintenance (servicing) instructions in the literature accompanying this product.

Read and Retain These Instructions

- Read all of the instructions before you operate this equipment. Give particular attention to all safety precautions. Retain the instructions for future reference.
- Comply with all warning and caution statements in the instructions. Observe all warning and caution symbols that are affixed to this equipment.
- Comply with all instructions that accompany this equipment.

Placement

Place this equipment in a location that is close enough to an electrical outlet to accommodate the length of the power cord. Place this equipment on a stable surface. The surface must support the size and weight of this equipment.

WARNING:
Avoid personal injury and damage to this equipment. An unstable surface may cause this equipment to fall.

Ventilation

This equipment has openings for ventilation that protect it from overheating. To ensure the reliability of this equipment, follow these guidelines to avoid obstructing the openings:

- Do not place other equipment, lamps, books, or any other object on the top of this equipment.
- Do not place this equipment in any of the following locations:
  - On a bed, sofa, rug, or similar surface
  - Over a radiator or a heat register
  - In an enclosure, such as a bookcase or equipment rack, unless the installation provides proper ventilation

Cleaning the Equipment

Before cleaning this equipment, unplug it from the electrical outlet. Use a damp cloth to clean this equipment. Do not use a liquid cleaner or an aerosol cleaner. Do not use a magnetic/static cleaning device (dust remover) to clean this equipment.

Object and Liquid Entry

Never push objects of any kind into this product through openings as they may touch dangerous voltage points or short out parts that could result in a fire or electric shock. Do not expose this equipment to liquid or moisture. Do not place this equipment on a wet surface. Do not spill liquids on or near this equipment.

Accessories

Do not use accessories with this equipment unless recommended by your cable service provider.

Overloading

Do not overload electrical outlets, extension cords, or integral convenience receptacles, as this can result in a risk of fire or electric shock. For equipment that requires battery power or other sources to operate, refer to the operating instructions for that equipment.

Lightning and Power Surges

Ground (earth) your cable system to provide some protection against voltage surges and built-up static charges. Plug your equipment into a surge protector to reduce the risk of damage from lightning strikes and power surges. If you have questions, call your cable service provider.

Power Cord Protection

Arrange all power cords so that people cannot walk on the cords, place objects on the cords, or place objects against the cords, which can damage the cords. Give particular attention to the cords at the point at which the cord connects to the plug, at electrical outlets, and at the places where the cords exit the equipment.

Power Sources

A label on this equipment indicates the correct power source for this equipment. Operate this equipment only from an electrical outlet that has the voltage and frequency that the label indicates.

If you are unsure of the type of power supply to your residence, consult your cable service provider or your local power company.

Grounding

This equipment has a two-prong plug. Properly ground (earth) this equipment by inserting the plug into a grounded electrical, two-socket outlet. If this plug is polarized, it has one wide prong and one narrow prong. This plug fits only one way.

CAUTION:
To prevent electric shock, match wide blade of plug to the wide slot, and then fully insert.

If you are unable to insert this plug fully into the outlet, contact an electrician to replace your obsolete outlet.

Servicing

Do not open the cover of this equipment. If you open the cover, your warranty will be void. Refer all servicing to qualified personnel only. Contact your cable service provider for instructions.

Damage that Requires Service

For damage that requires service, unplug this equipment from the electrical outlet. Refer service to qualified service personnel when any of the following occurs:

- There is damage to the power cord or plug
- Liquid enters the equipment
- A heavy object falls on the equipment
- There is exposure to rain or water
- Operation is not normal (the instructions in this guide describe the proper operation)
- If you drop this equipment, or damage the cabinet of this equipment
- If this equipment exhibits a distinct change in performance

Upon completion of any service or repairs to this equipment, the service technician will perform safety checks to determine that the equipment is in proper operating condition.

Welcome!

Congratulations on adding the Explorer® 4200 Home Gateway to your television viewing experience!

The Explorer 4200 Home Gateway receives and displays analog and digital signals, and provides exceptional picture quality.

Through the Home Gateway, you can access interactive services, such as video-on-demand and pay-per-view programs. Contact your cable service provider for information about these and other available services.

Use the instructions in this guide to install the Home Gateway, to become familiar with the keys on the front panel of the Home Gateway, and to access your cable services. Then, begin enjoying the features of the Home Gateway.

Explorer eClub

To obtain additional information about the Home Gateway, Scientific-Atlanta invites you to join the Explorer eClub. This online club provides news and "what's up" information about the Home Gateway and offers you a chance to win prizes and other premium items.

To join the Explorer eClub, you must know the serial number of your Home Gateway. The number is located on the back panel of your Home Gateway, and looks similar to this example:

The serial number begins with **SA** and is located in the lower left corner of the bar code. Write the serial number here: _____ .

To access the Explorer eClub Web site type:
www.scientificatlanta.com/explorerclub

Before Installing the Home Gateway

Before you begin to install the Home Gateway:

- Read the IMPORTANT RULES FOR SAFE OPERATION section of this guide.
- Locate the Home Gateway serial number, which is on a bar code on the back panel of the Home Gateway. You will need this serial number to join the Explorer eClub. Also, if your system requires troubleshooting in the future, your cable service provider may ask for the serial number.
- If you plug the Home Gateway into an outlet that is controlled by a wall switch, keep the switch in the ON position. The on-screen guide is updated nightly. If the wall switch is in the OFF position, your Home Gateway will not receive the latest programming updates.
- Keep the top of the Home Gateway free of all objects and electronic devices, including your TV.
- It is recommended that you use a surge protector with your cable equipment and electronic devices.

Home Gateway Front Panel

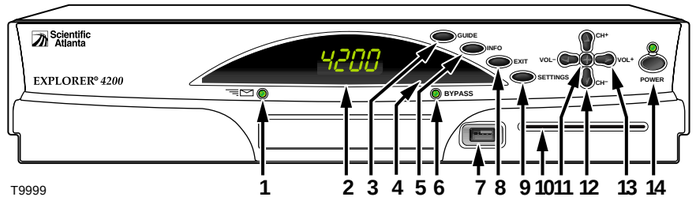

1	Message Indicator	Indicates a message from your cable service provider is waiting when blinking or illuminated. To access the message, press the Info key
2	LED Display	Displays the selected channel number and time of day
3	Guide	Accesses on-screen services, such as the on-screen guide, video-on-demand, or pay-per-view
4	IR Sensor	Receives the infrared signal from the remote control
5	Info	Displays a description of the selected program; available from the on-screen guide and while viewing a program
6	Bypass Indicator	Indicates the optional bypass feature is on when illuminated*
7	USB (Universal Serial Bus)	Connect to certain external USB devices
8	Exit	Exits menus, on-screen guide, and program information
9	Settings	Accesses the Settings menu
10	Smart card slot	Allows smart card access*
11	Select	Accesses your on-screen selection
12	CH+ and CH-	Scrolls up and down through the channels
13	VOL+ and VOL-	Increases and decreases volume
14	Power	Provides power to the Home Gateway. The light to the left of the Power key illuminates when the power is on. To receive nightly programming updates, keep the power on

** Contact your cable service provider for more information*

Home Gateway Back Panel

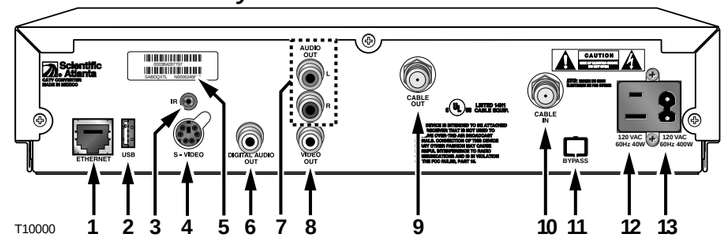

1	Ethernet port	Connect to an Ethernet-equipped computer*
2	USB Port	Connect to certain external USB devices*
3	IR Port	Connect to optional VCR Commander service
4	S-Video Out	Connect to S-Video input of TV or VCR (standard definition)
5	Serial Number	Located in the lower left corner of the bar code. Your cable service provider may ask for this number if your system requires troubleshooting in the future. You must know the serial number to join the Explorer eClub
6	Digital Audio Out	Connect to external digital inputs surround-sound receiver
7	Audio Out	Connect to left/right (L/R) audio inputs of a stereo receiver or a TV with stereo sound
8	Video Out	Connect to video input of TV or VCR (standard definition)
9	Cable Out	Connect to cable input of TV or VCR (standard definition)
10	Cable In	Connect to cable signal from cable service provider
11	Bypass	Connect an optional RF Bypass module*
12	AC Switched Outlet	Connect the AC power cord from another device, such as a TV
13	AC Power Input	Connect the Home Gateway to an AC electrical outlet using the cord provided

** Contact your cable service provider for more information*

Installing the Home Gateway

Connect the Home Gateway to a Stereo TV and Non-Stereo VCR

Use the connection diagram and follow these steps to connect the Home Gateway to a stereo TV and a non-stereo VCR.

> ⚠ **WARNING:**
> **Electric shock hazard! Unplug all electronic devices before connecting or disconnecting any device cables.**

1. Connect the Home Gateway to the TV and VCR as shown in the diagram.
2. Connect the Home Gateway to the coaxial cable coming from the wall.
3. Plug the Home Gateway and the TV into an AC power source.

   Important: Do *not* press the Power key on the Home Gateway yet.
4. Wait for the time to appear on the LED display.

   Important: It takes 2 to 3 minutes for the Home Gateway to be updated with the latest programming and service information. When the front panel displays the time, the update is complete.
5. Press the Power key on the Home Gateway.
6. Turn on the power to your TV, and set the input channel assigned by your cable service provider (channel 3 or 4).

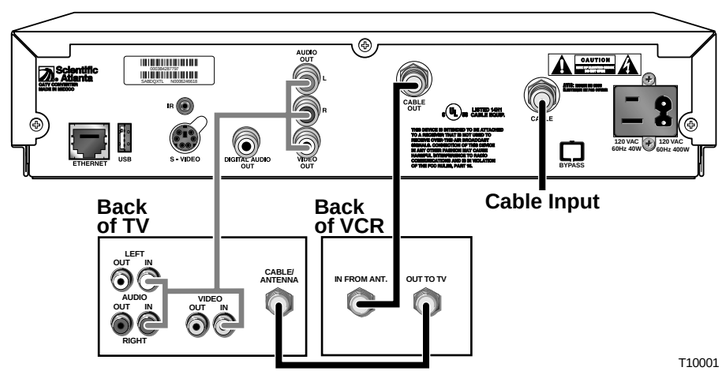

Required Cables

1 — Set of Video/Audio Cables
2 — 75-ohm Coaxial Cables

Audio Output

The audio output from the CABLE OUT is monaural (non-stereo).

The audio output from the AUDIO OUT LEFT and RIGHT is stereo.

If you connect to S-VIDEO OUT, you must also connect the LEFT and RIGHT AUDIO OUT on the Home Gateway to the LEFT and RIGHT AUDIO IN connectors on your TV, VCR, or stereo speakers to hear stereo sound.

Other Types of Connections

If you are connecting the Home Gateway to a different type of TV, VCR, or to additional devices, access our Web site at **www.scientificatlanta.com** for connection information.

Accessing Programs

Access Cable Services and Programs

You can access your cable services using the remote control or the keys on the front panel of the Home Gateway. (Refer to your remote control user's guide for remote control programming instructions.)

To access your cable services, use the keys as follows:

- Press the Guide key to access the on-screen guide. The on-screen guide displays schedules of TV programs and other services available from your cable service provider, such as video-on-demand and pay-per-view programs.
- Use the arrow keys to highlight a program in the schedule.
- Press the Info key for a description of a specific program (either from the on-screen guide or while viewing a program).
- Press the Select key to view a specific program you have selected from the guide.

For more information, read the user's guides that your cable service provider included with the Home Gateway installation package. These guides provide operating instructions for the on-screen guide, your remote control, and the VCR Commander™ service (if available).

Check and Correct

If your Home Gateway does not perform as expected, check the following conditions:

- Verify that the power to your TV is turned on.
- If plugged into a wall switch, verify the switch is in the ON position.
- Verify that all cables are properly connected.
- Verify that your TV is tuned to the proper output channel (3 or 4).

If your Home Gateway still does not perform as expected, check the following additional conditions:

No picture

- If your system includes a VCR and/or stereo, verify that you have properly connected them to the Home Gateway.
- Verify that the Home Gateway power light is on and the Bypass light is off.

No color

- Verify that the current TV program is broadcast in color.
- Adjust the TV color controls.

No sound

- If your setup includes a VCR and/or stereo, verify that you have properly connected them to the Home Gateway.
- Verify that the volume is turned up.
- Verify that the Bypass feature is disabled.

The LED on the front panel displays question marks instead of the channel number.

Press the Info key on the remote control or the front panel of the Home Gateway. You may have pressed the Power key before all of the latest programming updates were received by the Home Gateway.

The TV screen displays a message indicating that the Home Gateway is automatically updating its software.

Wait for the time to appear on the LED before continuing with the installation process. When the front panel displays the time, the update is complete.