Scientific Atlanta

Connecting the

Explorer® 1800™ Digital Home Communications Terminal

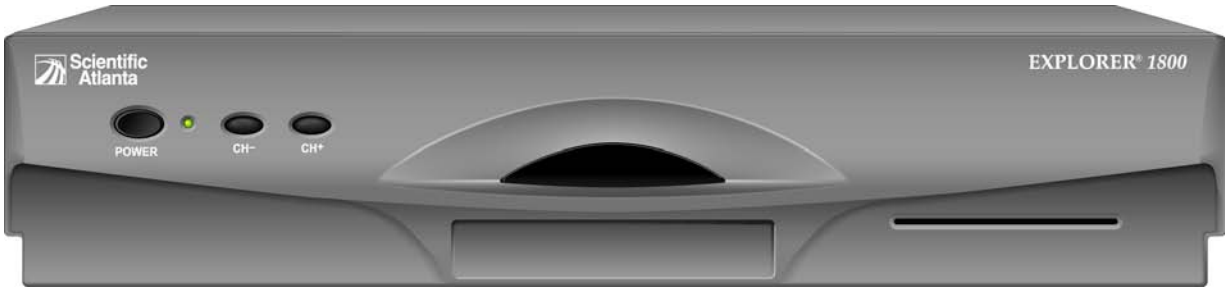

Notice for CATV Installers

CATV Installers Notice

If you are a CATV installer, read the information in the box below.

Note to CATV System Installer (USA/Canada Only)

This reminder is provided to call the CATV system installer's attention to Article 820-40 of the NEC (Section 54, Part I of the Canadian Electrical Code), that provides guidelines for proper grounding and, in particular, specifies that the CATV cable ground shall be connected to the grounding system of the building, as close to the point of cable entry as practical.

CAUTION

RISK OF ELECTRIC SHOCK
DO NOT OPEN

AVIS

RISQUE DE CHOC ÉLECTRIQUE
NE PAS OUVRIR

CAUTION: To reduce the risk of electric shock, do not remove cover (or back). No user-serviceable parts inside. Refer servicing to qualified service personnel.

WARNING

TO PREVENT FIRE OR ELECTRIC SHOCK, DO NOT EXPOSE THIS UNIT TO RAIN OR MOISTURE.

This symbol is intended to alert you that uninsulated voltage within this product may have sufficient magnitude to cause electric shock. Therefore, it is dangerous to make any kind of contact with any inside part of this product.

This symbol is intended to alert you of the presence of important operating and maintenance (servicing) instructions in the literature accompanying this product.

U.S. Patents

U.S. Patent List

A patent notice is affixed to this product. In addition, the product may also be covered by one or more of the following patents:

4,636,852; 4,641,181; 4,651,208; 4,691,353; 4,698,598; 4,719,642; 4,748,667; 4,829,569; 4,866,770; 4,885,775; 4,888,799; 4,890,319; 4,922,532; 4,965,534; 5,012,510; 5,029,207; 5,045,816; 5,053,883; 5,058,160; 5,142,690; 5,146,526; 5,214,390; 5,225,902; 5,225,925; 5,237,610; 5,239,540; 5,241,610; 5,255,086; 5,257,403; 5,267,071; 5,270,809; 5,271,041; 5,272,752; 5,282,028; 5,285,497; 5,287,351; 5,309,514; 5,319,709; 5,341,425; 5,347,388; 5,347,389; 5,361,156; 5,367,571; 5,379,141; 5,379,145; 5,381,481; 5,390,337; 5,400,401; 5,406,558; 5,418,782; 5,428,404; 5,430,568; 5,434,610; 5,436,749; 5,442,472; 5,455,570; 5,471,492; 5,477,199; 5,477,370; 5,481,389; 5,485,221; 5,493,339; 5,500,758; 5,502,499; 5,506,904; 5,519,780; 5,550,825; 5,579,055; 5,579,057; 5,583,562; 5,596,606; 5,600,378; 5,602,933; 5,640,388; 5,657,414; 5,675,575; 5,715,515; 5,724,525; 5,740,300; 5,742,677; 5,754,940; 5,757,416; 5,771,064; 5,774,859; 5,825,829; 5,826,167; 5,850,305; 5,854,703; 5,870,474; 5,892,607; 5,920,626; 5,923,755; 5,930,024; 5,930,515; 5,937,067; 5,963,352; 5,966,163; 5,982,424; 5,991,139; 5,999,207; 6,005,631; 6,005,938; 6,016,163; 6,028,941; 6,029,046; 6,052,384; 6,055,244; 6,072,532; 6,105,134; 6,148,039; 6,157,719; 6,188,729; 6,195,389; 6,212,278; 6,215,530; 6,219,358; 6,240,103; 6,243,145; 6,246,767; 6,252,964; 6,272,226; 6,292,081; 6,292,568; 6,320,131; 6,374,275; 6,405,239; 6,411,602; 6,417,949; 6,424,714; 6,424,717; 6,433,906; 6,438,139; 6,463,586; 6,467,091; 6,476,878; 6,493,876; 6,510,519; 6,516,002; 6,516,412; 6,526,508; 6,538,595; 6,546,013; 6,560,340; 6,567,118; 6,570,888; 6,622,308; 6,629,227; 6,664,984; 6,667,994; 6,671,879; 6,674,967; 6,678,891; 6,714,598; 6,721,352; 6,721,956; 6,725,459; 6,738,982; 6,744,892; 6,744,967; 6,751,271; 6,760,918; 6,795,972; 6,802,077; 6,804,708; 6,811,447; 6,817,028; D348065; D354959; D359737; D363932; D390217; D434753; RE36988

Contents

Important Safety Instructions 4
Welcome 6
Safety First 6
The Explorer eClub 6
Identify Your Set-Top 6
What's On the Front Panel? 7
What's On the Back Panel? 8
Connecting the Set-Top 9
Connections for a Standard-Definition TV and VCR 10
Watch TV 11
Performance Tips 11
Frequently Asked Questions 11
Connecting the 1800 to a Standard TV and Standard VCR 12
Connecting the 1800 to a Stereo TV and Stereo VCR 13
Compliance Information 14

IMPORTANT SAFETY INSTRUCTIONS

Heed Warnings

Adhere to all warnings on the product and in the operating instructions.

Read, Retain, and Follow These Instructions

Read all of the instructions before you operate this product. Follow all operating instructions that accompany this product. Retain the instructions for future use. Give particular attention to all safety precautions.

Comply With Warnings

Avoid electric shock. Comply with all warnings and cautions in the operating instructions, as well as those that are affixed to this product.

Power Warnings

Providing a Power Source

A label on this product indicates the correct power source for this product. Operate this product only from an electrical outlet with the voltage and frequency indicated on the product label.

If you are uncertain of the type of power supply to your home or business, consult your cable service provider or your local power company.

Grounding This Product (U.S.A. and Canada Only)

WARNING: To avoid electric shock and fire hazard, match the plug and outlet connections carefully, then fully insert. If the plug and outlet do not match, or you cannot fully insert the plug, contact an electrician to update your power outlets.

If this product is equipped with either a three-prong (grounding pin) safety plug or a two-prong (polarized) safety plug, follow these safety guidelines to properly ground this product.

- For a 3-prong plug (one prong on this plug is a protective grounding pin), insert the plug into a grounded mains, 3-prong outlet.

  Note: This plug fits only one way. If you are unable to insert this plug fully into the outlet, contact your electrician to replace your obsolete outlet.
- For a 2-prong plug (a polarized plug with one wide blade and one narrow blade), insert the plug into a polarized mains, 2-prong outlet in which one socket is wider than the other.

  Note: If you are unable to insert this plug fully into the outlet, try reversing the plug. If the plug still fails to fit, contact an electrician to replace your obsolete outlet.

Overloading

WARNING: Avoid electric shock and fire hazard! Do not overload mains AC outlets and extension cords. For products that require battery power or other power sources to operate them, refer to the operating instructions for those products.

Do not overload electrical outlets, extension cords, or integral convenience receptacles as this can result in a risk of fire or electric shock. For products that require battery power or other sources to operate, refer to the operating instructions for that product.

Preventing Power Cord Damage

Arrange all power cords so that people or pets cannot walk on the cords. Do not place objects on the cords. Do not lean objects against the cords. Placing objects on or leaning objects against cords can damage the cords. Give particular attention to cords at the point at which the cord connects to plugs, at the electrical outlets, and where the cords exit the product.

Usage Warnings

Providing Ventilation

This product has openings for ventilation that protect it from overheating. To ensure the reliability of this product, do the following:

- Do not block or cover these openings.
- Do not place entertainment devices (such as VCRs or DVDs), lamps, books, vases with liquids, or other objects on top of this product.
- Do not place this product in any of the following locations:
  - On a bed, sofa, rug, or similar surface
  - Near heat sources such as radiators, heat registers, stoves, or other products (including amplifiers) that produce heat
  - In an enclosure, such as a bookcase or rack, unless the installation provides proper ventilation

Selecting a Proper Location

WARNING: Avoid personal injury and damage to this product! An unstable surface may cause this product to fall.

Place this product in a location that is close enough to an electrical outlet and where the power cord is easily accessible to be disconnected from the wall outlet or from the rear panel of the product.

Important: The power cord is the mains power supply disconnect device.

Place this product on a stable surface. The surface must support the size and weight of this product.

Cleaning This Product

WARNING: Avoid electric shock! Unplug this product before cleaning.

Before cleaning this product, unplug it from the electrical outlet. Use a damp cloth to clean this product. Do not use a liquid cleaner or an aerosol cleaner. Do not use a magnetic/static cleaning device (dust remover) to clean this product.

Protecting This Product From Foreign Objects and Water or Moisture Damage

WARNING: Avoid electric shock and fire hazard! Never push objects through the openings in this product. Foreign objects can cause electrical shorts that can result in electric shock or fire. Do not expose this product to rain or moisture. Do not place objects filled with liquid, such as vases, on this product.

Never push objects of any kind into this product through openings as they may touch dangerous voltage points or short out parts that could result in a fire or electric shock.

Do not expose this product to liquids or moisture. Do not place this product on a wet surface. Do not spill liquids on or near this product.

Do not use this product near water (such as a bath tub, wash bowl, sink, or laundry tub), in a wet basement, or near a swimming pool.

Accessories Warnings

WARNING: Avoid any potential for electric shock or fire. Do not use accessories with this product unless recommended by your cable service provider.

Avoid any potential for electric shock or fire.

Do not use accessories with this product unless recommended by your cable service provider.

Service Warnings

Servicing This Product

WARNING: Avoide electric shock! Opening or removing the cover may expose you to dangerous voltages. This product contains no user-serviceable parts. Refer all servicing to qualified service personnel.

Do not open the cover of this product. If you open the cover, your warranty will be void. Refer all servicing to qualified personnel only. Contact your cable service provider for instructions.

Obtaining Service for Product Damage

For damage that requires service, unplug this product from the AC outlet. Then, contact your cable service provider or qualified service personnel to obtain service for the following conditions:

- If there is damage to the power-supply cord or plug
- If liquid enters this product
- If you expose this product to rain or water
- If you drop this product, a heavy object falls on this product, or damage occurs to the cover of this product
- If this product does not operate normally by following the operating instructions
- If this product exhibits a distinct change in performance

Checking Product Safety

Upon completion of any service or repairs to this product, the service technician must perform safety checks to determine that this product is in proper operating condition.

Outdoor Grounding System

If this product connects to an outdoor antenna or cable system, be sure the antenna or cable system is grounded (earthed). This provides some protection against voltage surges and built-up static charges.

Article 810 of the National Electric Code (NEC) ANSI/NFPA No. 70-1990, provides the following information:

- Grounding of the mast and supporting structure
- Grounding the lead-in wire to an antenna discharge unit
- Size of the grounding conductors
- Location of the antenna-discharge unit
- Connection to grounding electrodes
- Requirements for the grounding electrodes (see the following antenna grounding diagram as recommended by NEC ANSI/NFPA 70)

Example Of Antenna Grounding

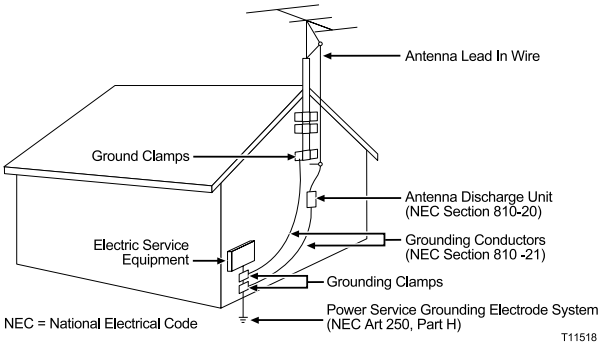

Lightning

For added protection for this product during a lightning storm, or when it is left unattended and unused for long periods of time, unplug it from the wall outlet and disconnect the antenna or cable system. This will prevent damage to the product due to lightning and power-line surges. Plugging this product into a surge protector in order to reduce the risk of damage.
Note: Unplugging this product for an extended period of time can result in loss of authorization. For reauthorization, contact your cable service provider.

Power Lines

WARNING: To avoid electric shock, do not locate an outside antenna system in the vicinity of overhead power lines or power circuits.

Do not locate an outside antenna system in the vicinity of overhead power lines or power circuits. When installing an outside antenna system, take extreme care to keep from touching power lines or circuits, as contact might be fatal.

Welcome!

The Explorer® 1800™ Digital Home Communications Terminal receives and displays digital signals, and it delivers programs in exceptional picture and audio quality.

Through the 1800 you can also access interactive services, such as video-on-demand and pay-per-view programs. Contact your cable service provider for information about these and other available services.

Use the instructions in this guide to install the 1800 and to access your cable services. Then, sit back and enjoy the 1800 experience!

Safety First

Before using the set-top, read the IMPORTANT SAFETY INSTRUCTIONS section of this guide.

The Explorer eClub

The online Explorer eClub provides news and information about the 1800. You can access the Explorer eClub on the Internet at the following Web address:

www.scientificatlanta.com/explorerclub

To join and access the online Explorer eClub, you must enter the model number of your set-top. The model number is located on the front panel.

Identify Your Set-Top

If the set-top requires troubleshooting in the future, your cable service provider may ask for the serial number.

To find the serial number for your set-top, look on the back panel for a label that is similar to the example shown here. The serial number begins with “SA” and is located in the lower left corner of the bar code.

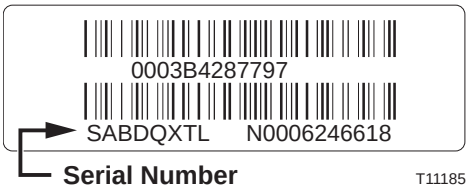

Use the space provided here to record the serial number:

_____

What's On the Front Panel?

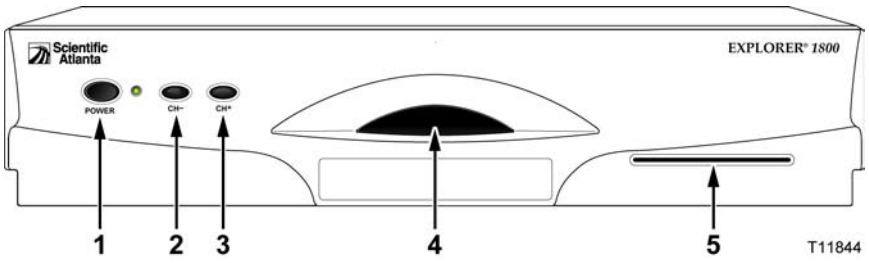

1 Power	Turns the 1800 on and off
2 CH -	Enables you to scroll down through the channels
3 CH + -	Enables you to scroll up through the channels
4 IR Sensor	Receives the infrared signal from the remote control
5 Smart Card	Allows smart card access (This feature may not be available on all 1800 models.)

What's On the Back Panel?

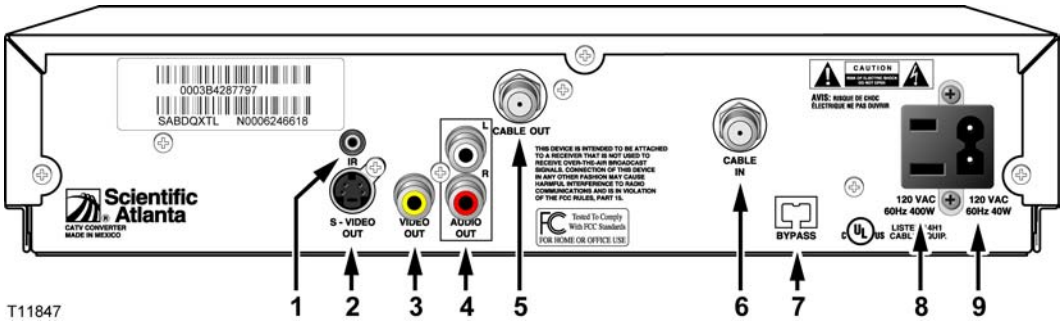

1	**IR**	This connector is reserved for future use.
2	**S-Video Out**	Connect an S-Video cable to send an S-Video signal to your TV or VCR. This signal is standard definition but higher quality than other standard television connections.
3	**Video Out**	Connect to the video input of your TV or VCR.
4	**Audio Out (LEFT and RIGHT)**	Connect RCA cables to Audio Out to send audio signals (left and right) to a stereo receiver or TV with stereo outputs.
5	**Cable Out**	Connect a coaxial cable to Cable Out to send audio and video signals to a TV or VCR. These signals are standard definition (SD) TV video and monaural audio.
6	**Cable In**	Connect the coaxial cable that delivers the signal from your cable service provider.
7	**RF BYPASS**	Contact your cable service provider for more information.
8	**AC Outlet**	Connect the AC power cord from another device, such as a TV.
9	**AC Power Input**	Connect the power cord to deliver power to the 1800.

Connecting the Set-Top

To connect your 1800 to your entertainment devices, complete these steps.

1

Connect the coaxial cable that carries the signal from your cable service provider to the CABLE IN connector on the back panel of the 1800.

2

Before connecting your SDTV to the set-top, read the **Connections for a Standard-Definition TV and VCR** section on page 10. Then, see the connection diagrams beginning on page 12.

3

Plug the 1800 and the TV into an AC power source.

Important: To protect the 1800 from power surge damage, ground (earth) your cable product to provide some protection against voltage surges and built-up static charges. To avoid these voltage surges that can be caused by lightning storms and power outages, plug the 1800 into a surge protector to reduce the risk of damage.

4

Do not turn on the 1800 or TV yet.

5

It may take several minutes for the set-top to receive the latest software, programming, and service information. When the Power light on the front panel stops flashing, that is your indication that the programming update is complete.

6

To begin watching TV, turn the TV ON, and press POWER on the front of the 1800, or press Power on the remote control.

Connections for a Standard-Definition TV and VCR

Before you begin to connect the 1800 with an SDTV, refer to your TV user's guide for detailed connection instructions.

Then, use *one* of the following connection combinations, but not both:

- Connect the VIDEO OUT port and the L/R AUDIO OUT ports from the set-top to the VIDEO IN and L/R AUDIO IN ports on a TV or VCR.
- Or, connect the CABLE OUT port from the set-top to the CABLE IN/ANT IN port on a TV or VCR.

Required Connections to an SDTV		1800 Connections	SDTV Connections
Video	The Video Out connection provides a video connection to SDTVs.	VIDEO OUT	VIDEO IN
S-Video	The S-Video Out connection is an alternative to the video connection and provides optimal video to standard-definition TVs.	S-VIDEO OUT	S-VIDEO IN
Audio	The left and right audio outputs provide stereo sound when connected to a stereo receiver or a TV with stereo sound.	L R AUDIO OUT	L R AUDIO IN
Cable Out	The Cable Out connection provides both a video and an audio connection to an SDTV.	CABLE OUT	CABLE/ ANTENNA
Optional Connection		**1800 Connection**	**SDTV Connection**
VCR	The Cable Out connection provides both a video and an audio connection to the VCR.	CABLE OUT	IN FROM ANT.

Watch TV

Use the Remote Control to Access Services and Programs

Press the following keys on the remote control to access cable services and programs :

- **Guide**–Display the on-screen guide of TV programming schedules and other services available from your cable service provider, such as video-on-demand and pay-per-view programs.
- **Arrows**–Highlight a program in the schedule.
- **Info**–Display the description of a specific program (either from the on-screen guide or while viewing a program).
- **Select**–Watch a specific program in the guide.

Performance Tips

If the 1800 does not perform as expected, the following tips may help. If you need further assistance, contact your cable service provider.

No Picture

- Verify that the power to your TV is turned on.
- If the 1800 is plugged into a wall switch, verify the wall switch is in the ON position.

  Note: You should *avoid* plugging the 1800 into an outlet that is controlled by a wall switch.
- Verify that all cables are properly connected.
- If your system includes a VCR or stereo, verify that you have properly connected them to the 1800.
- Verify that your TV is connected to the proper TV input port.
- Verify that the TV is set to the proper input channel.

No Color

- Verify that the current TV program is broadcast in color.
- Adjust the TV color controls.

No Sound

- If your setup includes a stereo, verify that you have properly connected it to the 1800.
- Verify that the volume is turned up.
- Verify that the mute function is not engaged.

Frequently Asked Questions

Where are the connection diagrams?

The diagrams on the following pages show examples of typical connections for the 1800.

What cables do I need?

Some of the cables shown in the diagrams may not be included with the 1800. The required cables are shown in the connection diagrams on the following pages.

Connecting the 1800 to a Standard TV and Standard VCR

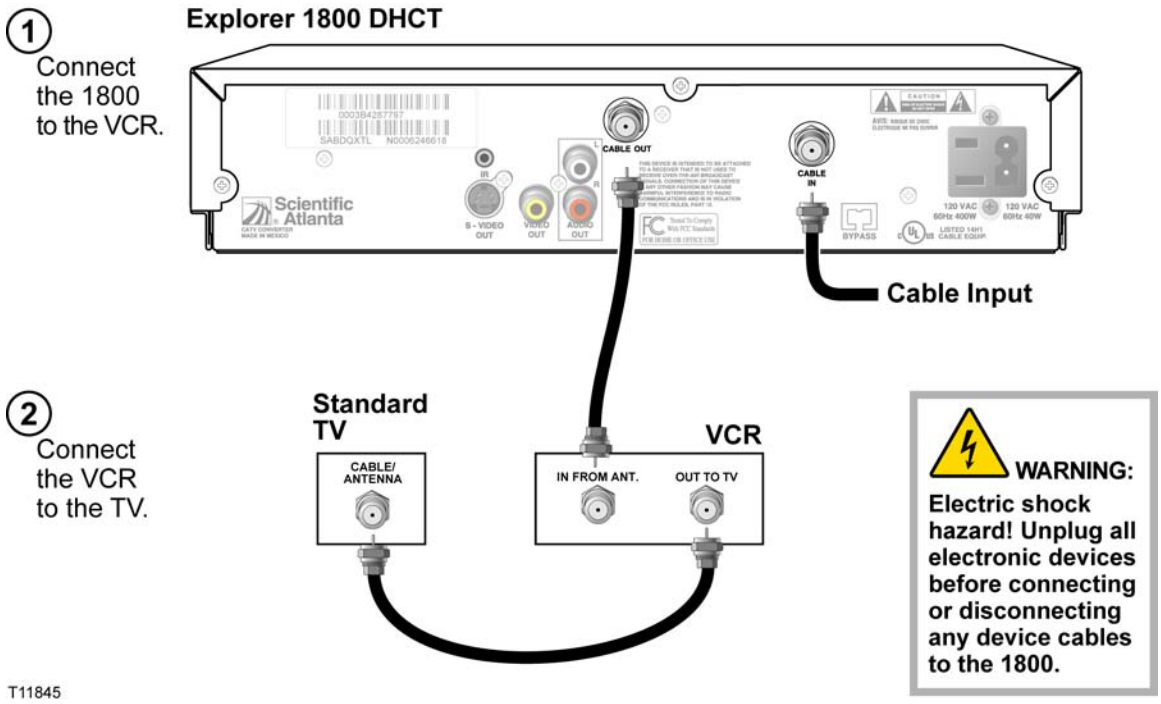

Connecting the 1800 to a Stereo TV and Stereo VCR

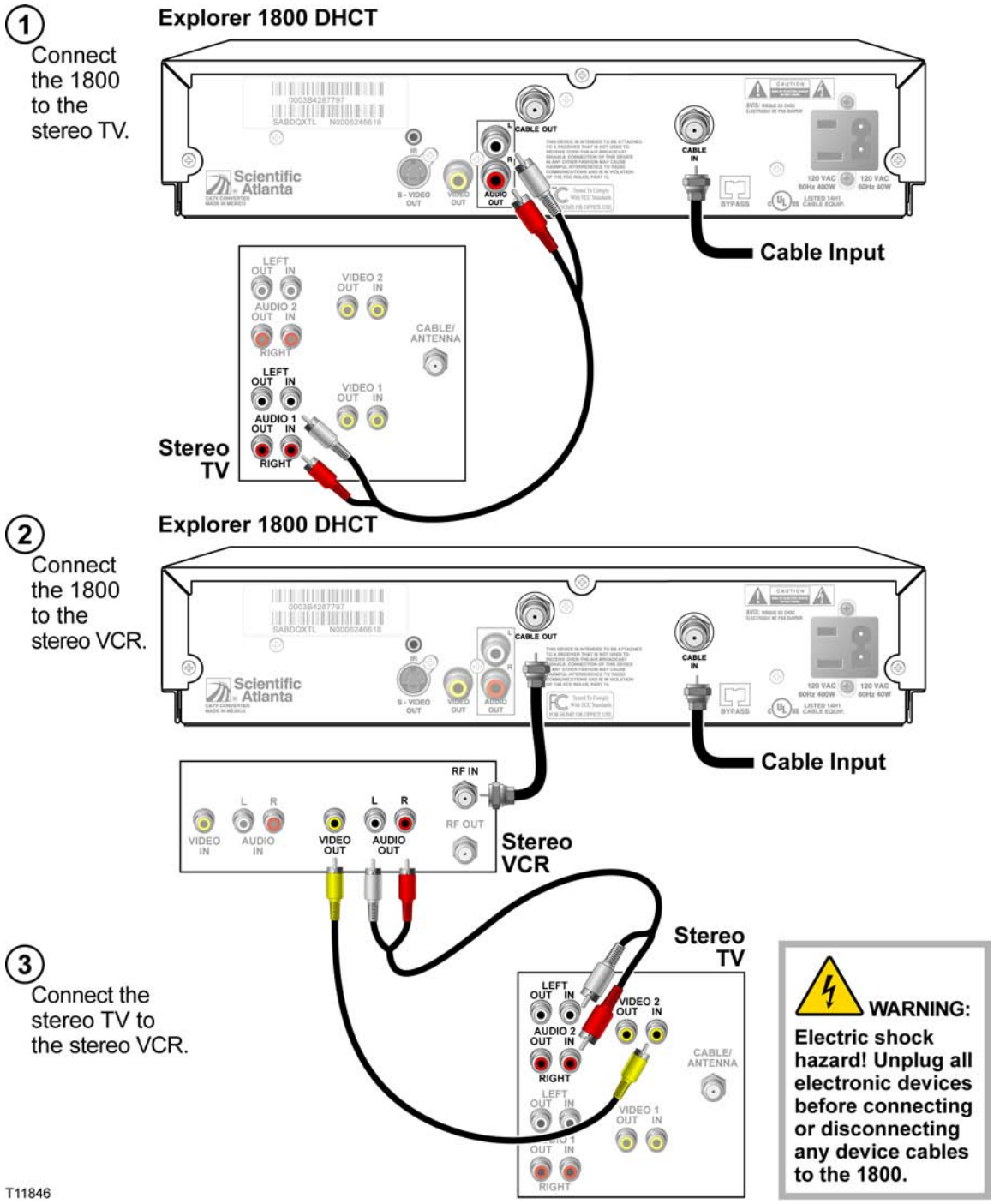

Compliance Information

United States FCC Compliance

This equipment has been tested and found to comply with the applicable limits of Part 15 of the FCC Rules. These limits are designed to provide reasonable protection against harmful interference in a residential installation. This equipment generates, uses, and can radiate radio frequency energy and, if not installed and used in accordance with the instructions, may cause harmful interference to radio or TV reception, which can be determined by turning the equipment off and on. The user is encouraged to try to correct the interference by one or more of the following measures:

- Increase the separation between the equipment and receiver
- Connect the equipment into an outlet on a circuit different from that to which the receiver is connected
- Consult your cable company or an experienced radio/TV technician for help

Any changes or modifications not expressly approved by Scientific-Atlanta could void the user's authority to operate the equipment.

Important: The information shown in the FCC Declaration of Conformity paragraph below is a requirement of the FCC and is intended to supply you with information regarding the FCC approval of this device. *The phone numbers listed are for FCC-related questions only and not intended for questions regarding the connection or operation for this device. Please contact your cable service provider for any questions you may have regarding the operation or installation of this device.*

FCC Declaration of Conformity

This device complies with *Part 15 of the FCC Rules*. Operation is subject to the following two conditions:
1) this device may not cause harmful interference, and 2) this device must accept any interference received, including interference that may cause undesired operation.

EXPLORER® 1800
Digital Home Communications Terminal:
Model 1800
Manufactured by: Scientific-Atlanta, Inc.;
5030 Sugarloaf Parkway;
Lawrenceville, Georgia 30044; USA
Telephone **770-236-1077**

Canada EMI Regulation

This Class B digital apparatus complies with Canadian ICES-003.

Cet appareil numérique de la class B est conforme à la norme NMB-003 du Canada.

Software and Firmware Use

Scientific-Atlanta, Inc. owns copyrights to the software included in your set-top and furnishes the software to your cable service provider under a license agreement. You may only use or copy this software in accordance with the terms of your cable service provider.

Scientific-Atlanta, Inc. owns copyrights to the firmware in this equipment. You may only use the firmware in the equipment in which it is provided. Any reproduction or distribution of this firmware, or any portion of it, without the express written consent of Scientific-Atlanta, Inc. is prohibited.

Trademarks

Explorer, Scientific-Atlanta, and the Scientific-Atlanta logo are registered trademarks of Scientific-Atlanta, Inc. 1800 is a trademark of Scientific-Atlanta. All other trademarks shown are trademarks of their respective owners.

Disclaimer

Scientific-Atlanta, Inc. assumes no responsibility for errors or omissions that may appear in this guide. Scientific-Atlanta reserves the right to change this guide at any time without notice.

Scientific-Atlanta, Inc.,
5030 Sugarloaf Parkway,
P.O. Box 465447,
Lawrenceville, GA 30042

www.scientificatlanta.com

Product and service availability subject to change without notice.

© 2005 by Scientific-Atlanta, Inc. All rights reserved.

Printed in the United States of America

May 2005

4010258 Rev A